Exclusive e^+e^-, Di-photon and Di-jet production at the Tevatron

Koji Terashi
The Rockefeller University
On behalf of the CDF and DØ Collaborations

XLIId Rencontres de Moriond,
QCD and High Energy Hadronic Interactions,
La Thuile, Italy, March 17-24, 2007

Exclusive Production

QED-mediated

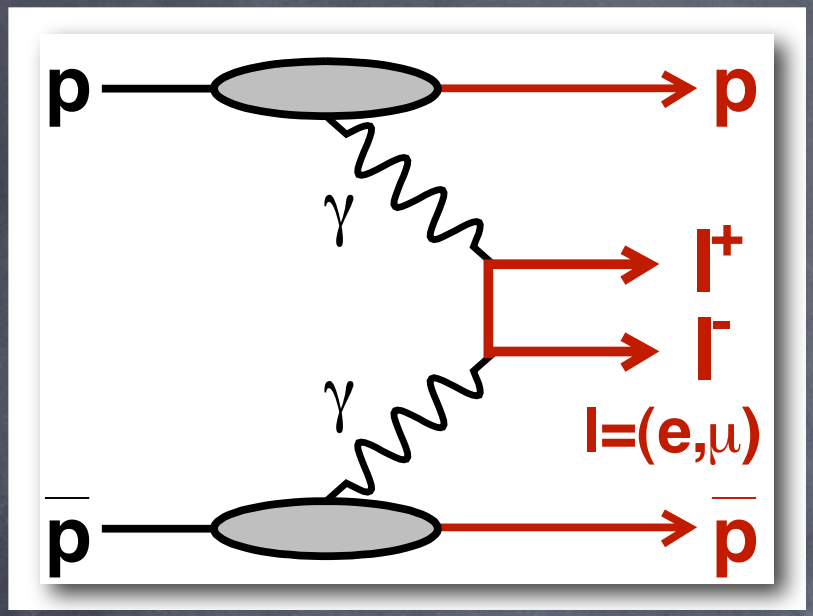

- cross section well known (< 1%)
  → validate analysis method
- Potential to improve LHC luminosity measurements

QCD-mediated

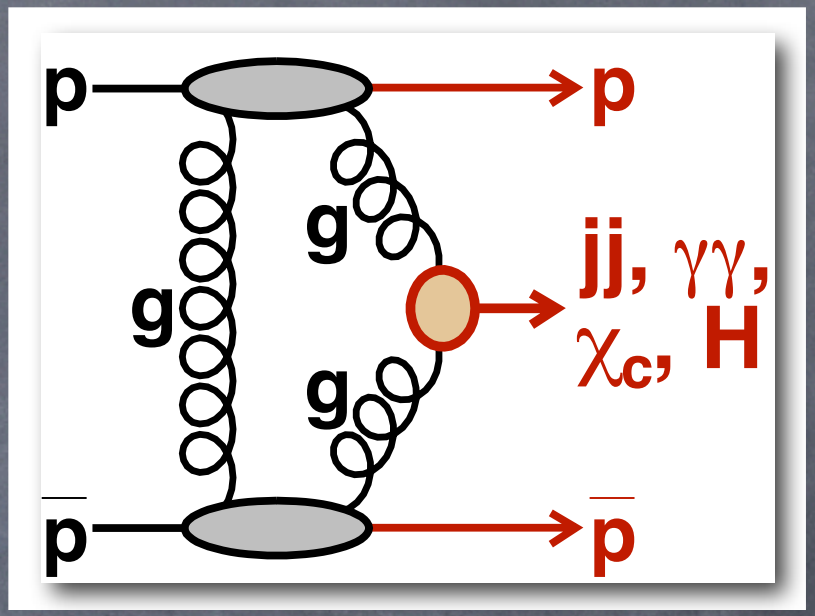

- cross section not known well
- Jz = 0 selection rule
- Potential to measure property of central system using protons

➡ Observe exclusive events in p̄p collisions

➡ Measure exclusive jj and γγ at Tevatron to calibrate calculations of exclusive Higgs production at LHC

Outline

- CDF II detector
- Exclusive e^+e^- : $\bar{p}p \rightarrow \bar{p}eep$
- Exclusive Di-photon : $\bar{p}p \rightarrow \bar{p}\gamma\gamma p$
- Exclusive Di-jet : $\bar{p}p \rightarrow \bar{p}jjp$
- Other Exclusive Processes
- Summary

CDF II Detector

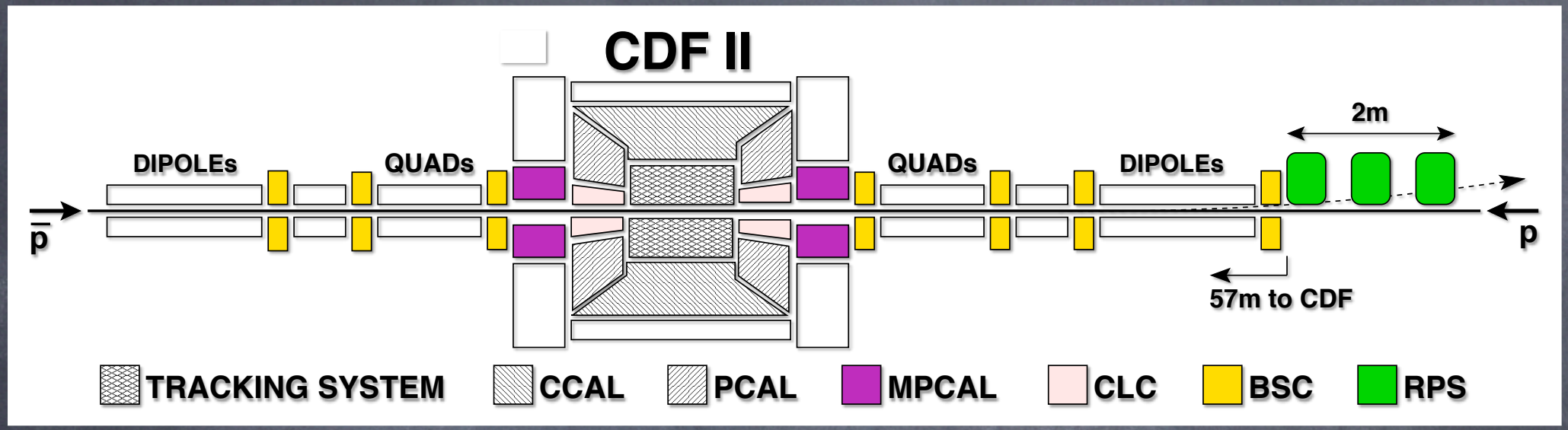

Wide detector coverage helps exclusive measurements

- ➡ Tracking Detectors : $|\eta|<2.0$
- ➡ Calorimeters : $|\eta|<5.2$
- ➡ Veto Counters (BSC) : $5.4<|\eta|<7.4$
- ➡ Leading Antiproton Detectors (RPS)*

*used in $\bar{p}p \to \bar{p}jjp$ search

Exclusive e^+e^- Production

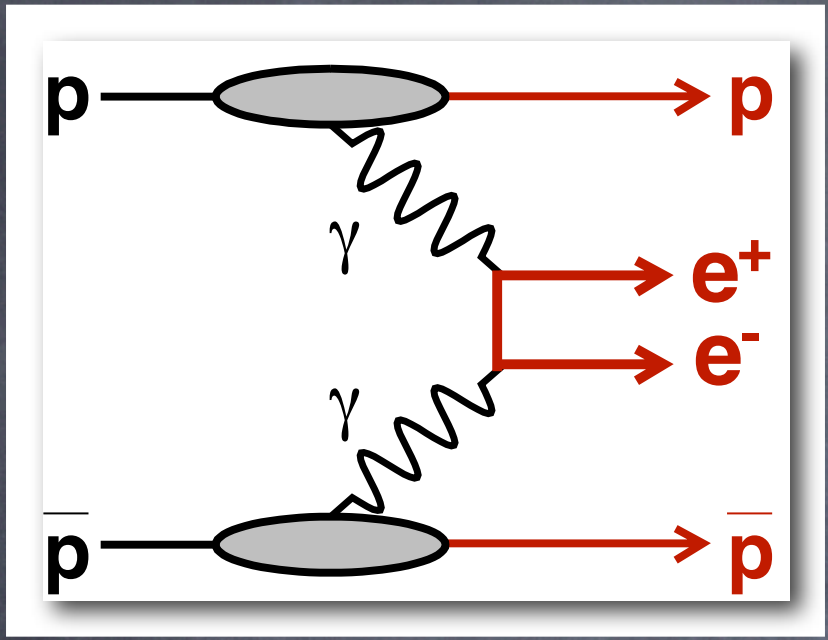

QED two-photon exchange

⇨ σ known very well (< 1%)

- Good control sample for $\bar{p}p \to \bar{p}\gamma\gamma p$ search

Analysis requires

- protons do not dissociate
- only e^+e^- produced (E_T>5GeV, $|\eta|$<2) and nothing else

Detailed analysis performed to set thresholds for each detector

Effective Luminosity : 46±3 pb^{-1} (out of 532 pb^{-1})

Exclusive e^+e^- Production

16 candidate events observed

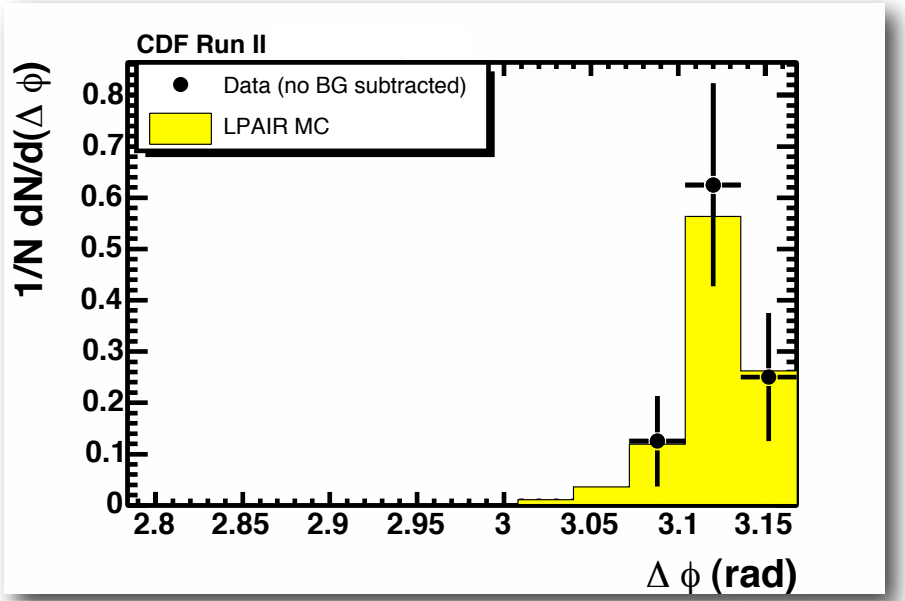

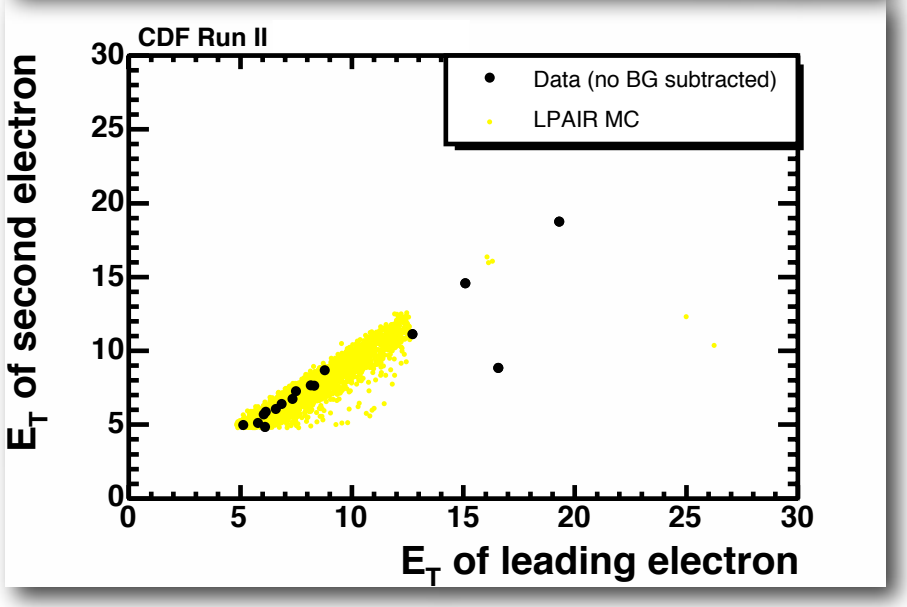

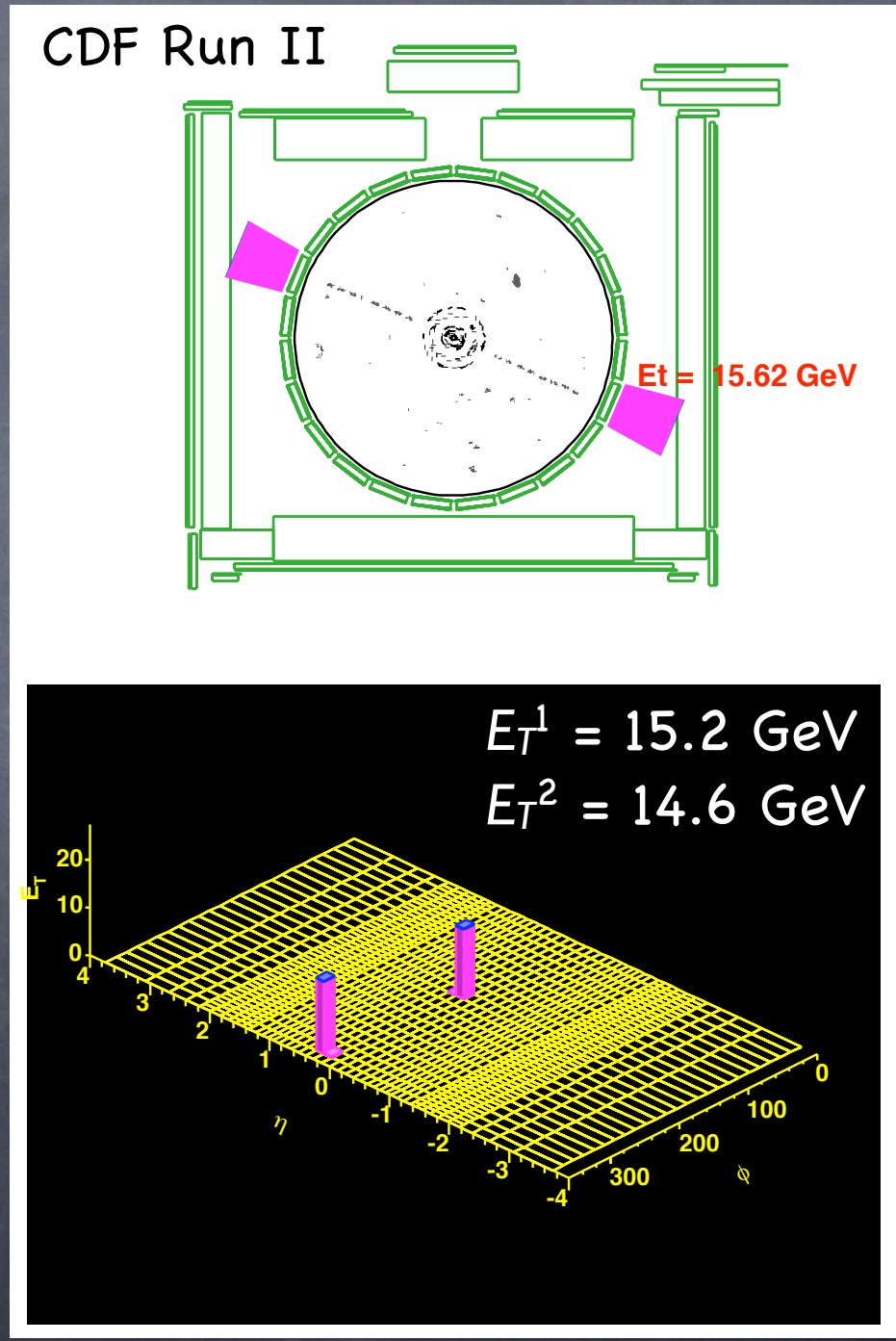

Exclusive e^+e^- Production

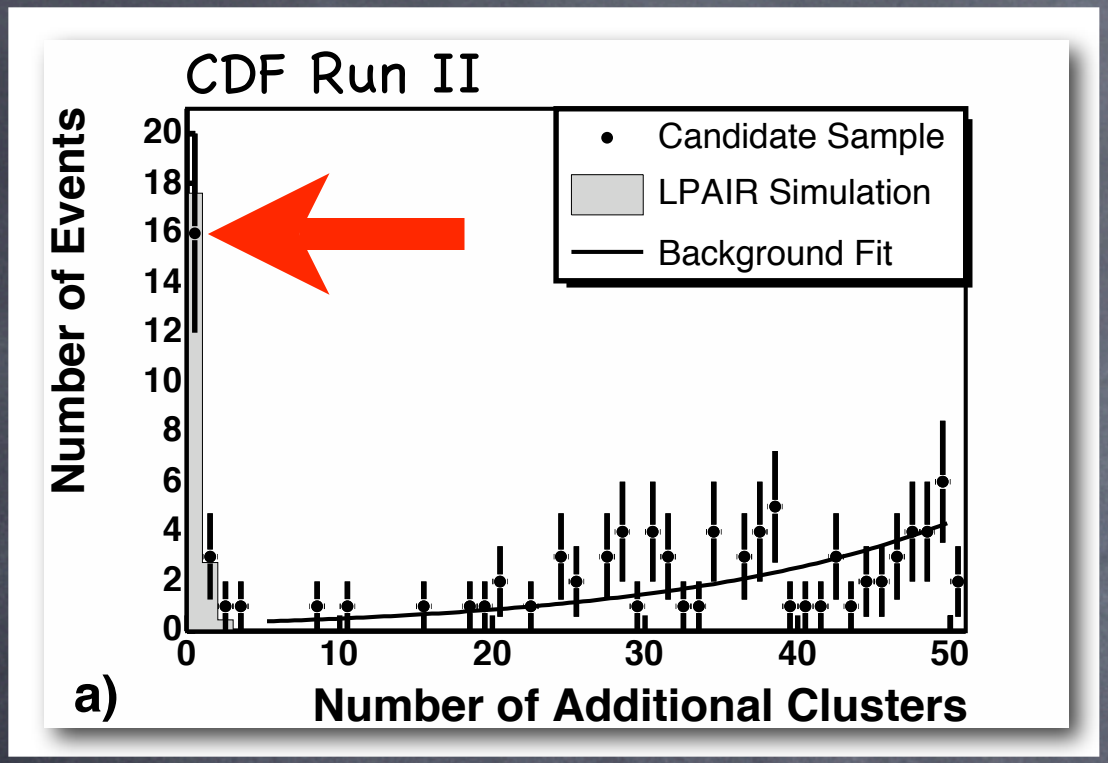

PRL **98**, 112001 (2007)

16 candidate events

Background: 1.9±0.3 events

➡ 5.5σ observation

$\sigma_{MEAS.} = 1.6\ ^{+0.5}_{-0.3}(stat) \pm 0.3(syst)$ pb

agrees with LPAIR Monte Carlo (QED) prediction $\sigma_{LPAIR} = 1.71 \pm 0.01$ pb

➡ Good agreement serves to validate analysis method

Exclusive Di-photon Production

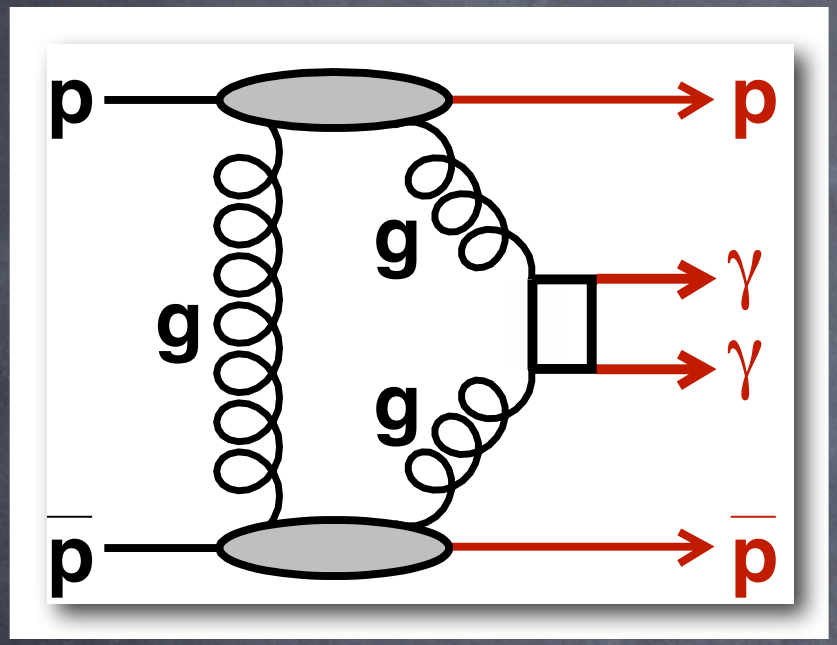

QCD gluon exchange process

⇨ factor 3~4 uncertainty in σ

- Can be used to calibrate exclusive Higgs cross section

Analysis requires

- same event selections as $\bar{p}p \rightarrow \bar{p}eep$ (except e_{track} veto)
- only $\gamma\gamma$ produced (E_T>5GeV, $|\eta|$<1) and nothing else

Exclusive Di-photon Production

3 candidate events observed

Khoze, Martin, Ryskin
$\sigma_{\gamma\gamma}$~40 fb (factor 3 uncertainty)
➡ ~1 event expected

Background estimation in progress
Expect final results soon!

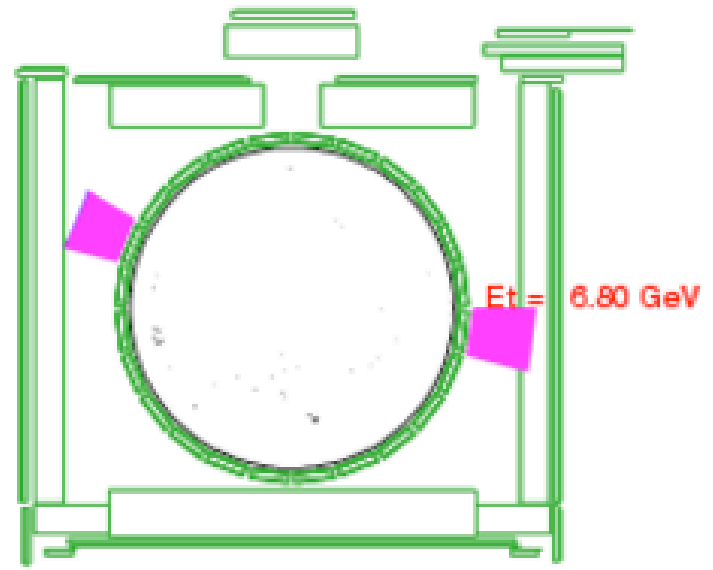

CDF Run II Preliminary

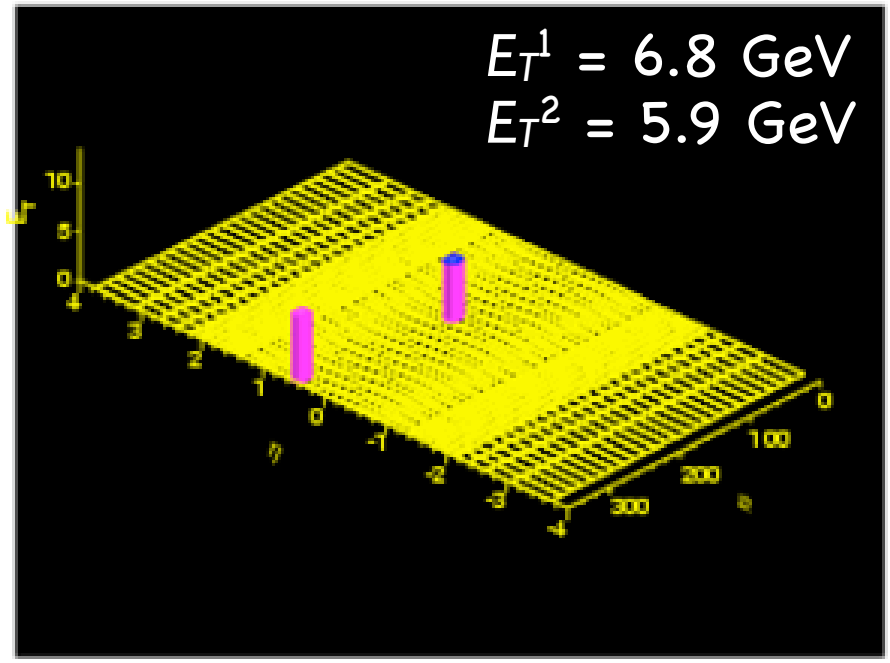

Exclusive Di-jet Production

Strategy

- Select inclusive DPE di-jets : $\bar{p}+p \rightarrow \bar{p}+X(\in 2\text{jets})+\text{gap}$
- Reconstruct di-jet mass fraction : $R_{jj} = M_{jj}/M_X$
- Look for data excess over DPE di-jet background as $R_{jj} \rightarrow 1$

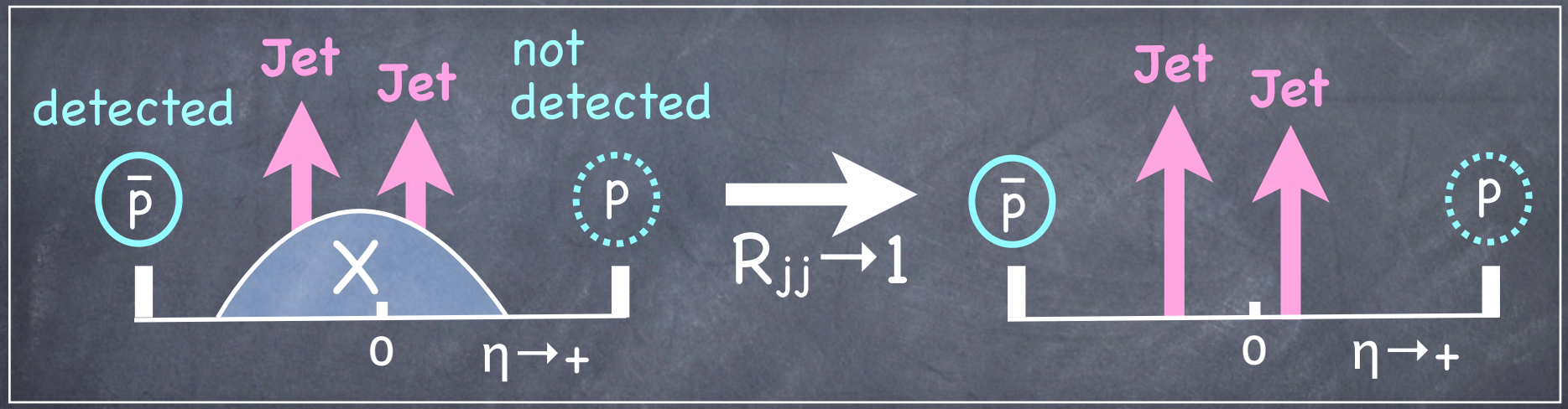

➡ Signal (R_{jj}=1) smeared due to shower/hadronization effects, NLO $gg \rightarrow ggg$, $q\bar{q}g$ contributions, etc.

➡ Obtain DPE di-jet background from POMWIG MC simulation (⇒ Uncertainty from Pomeron PDF)

Di-jet Mass Fraction

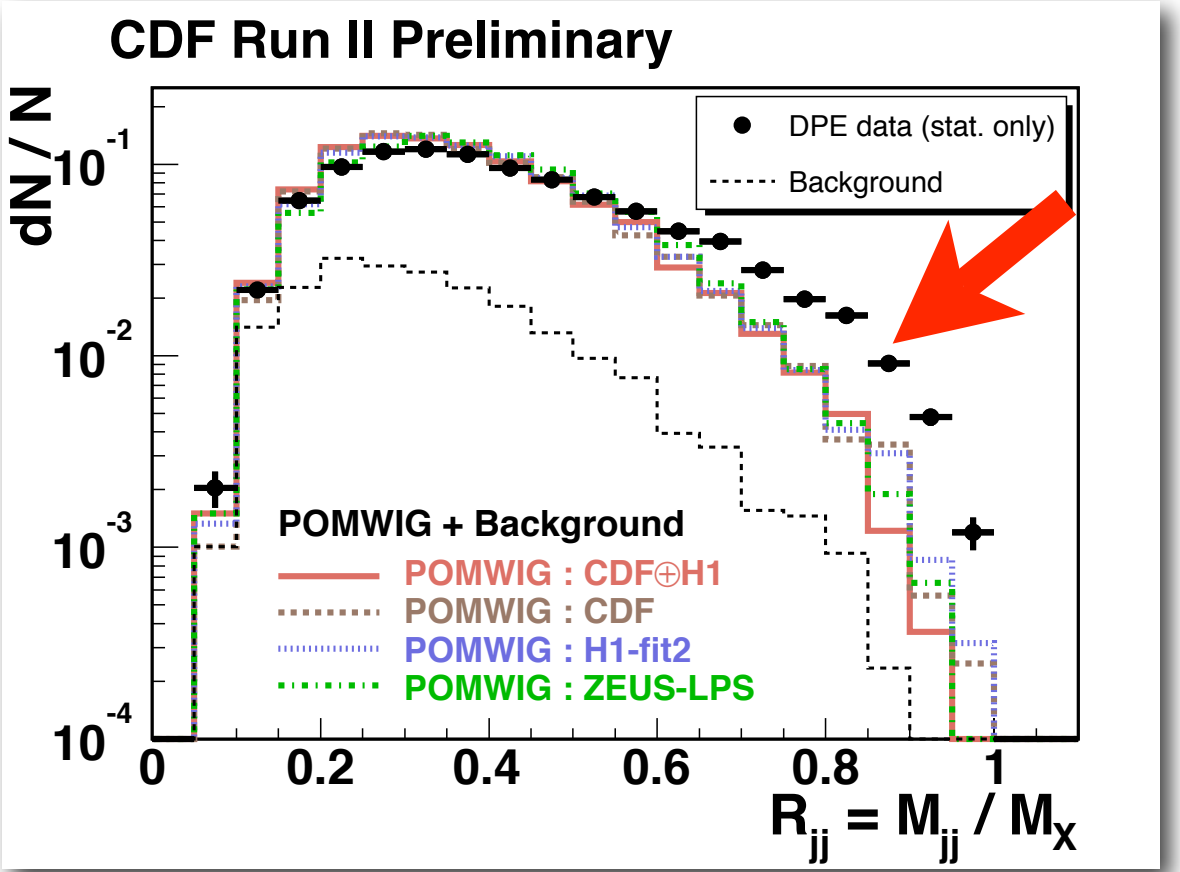

CDF Run II Preliminary

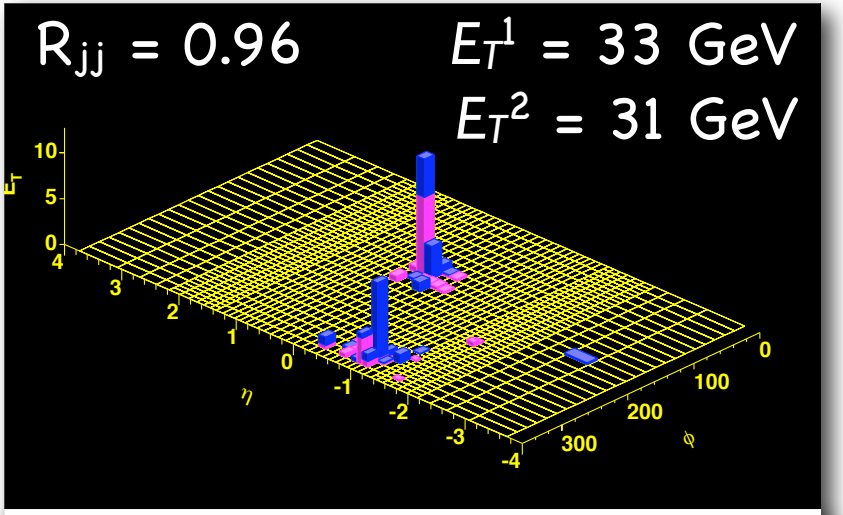

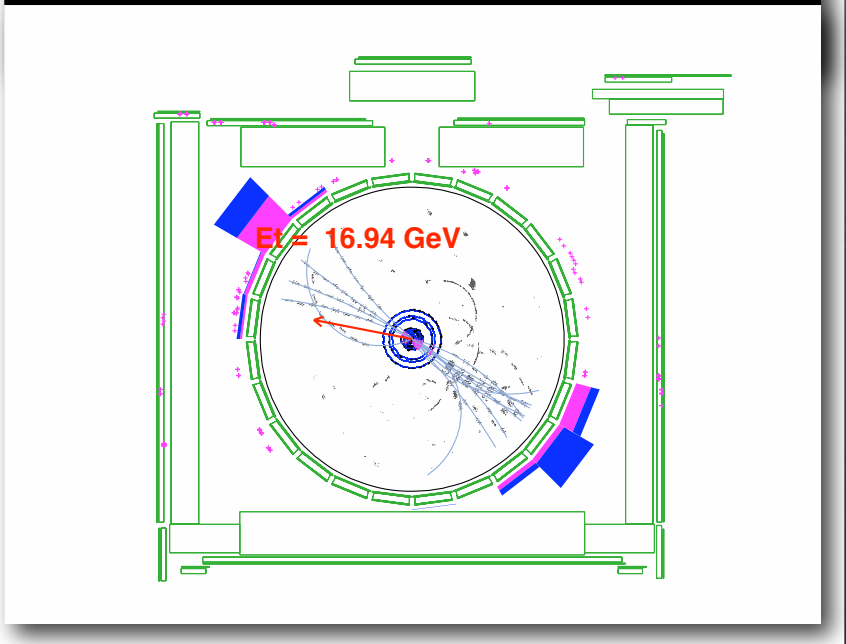

Excess observed over MC simulations with varied PDFs

MC Fit to R_{jj} Shape

Binned likelihood fits (MC normalization as free parameters)		
Signal MC	ExHuME CPC 175,232(2006)	DPEMC Exclusive DPE CPC 167,217(2005)
data bkgd signal fit	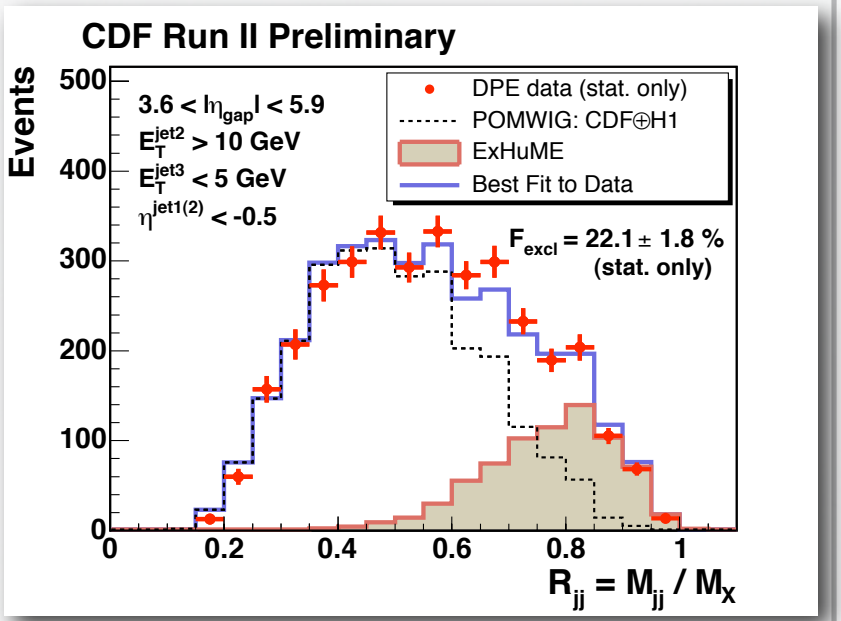	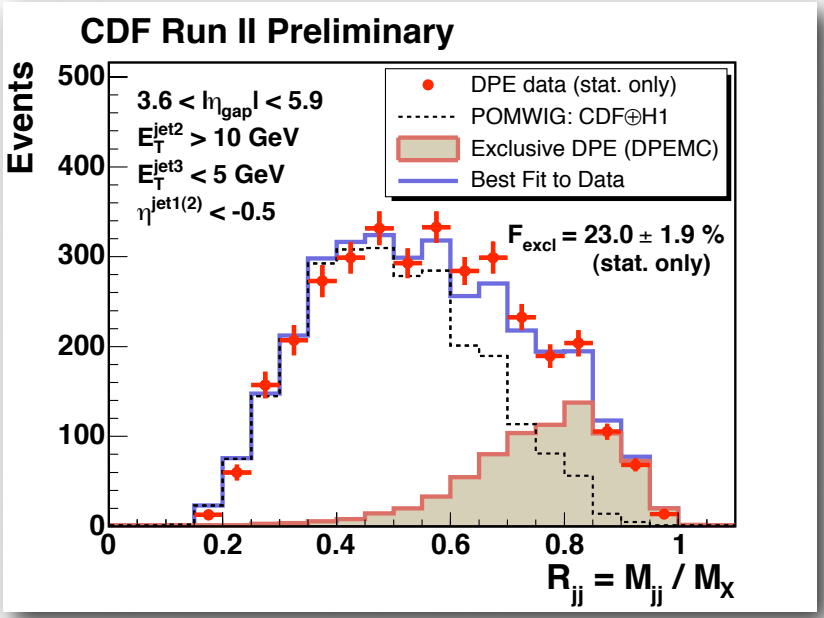
CDF⊕H1	22.1±1.8 %	23.0±1.9 %
CDF	21.7±1.8 %	22.6±1.9 %
H1-fit2	24.7±2.0 %	26.0±2.1 %
ZEUS-LPS	24.3±2.0 %	25.4±2.1 %

stat. error only

Exclusive Di-jet Signal

LO exclusive $gg \rightarrow q\bar{q}$ suppressed due to Jz=0 rule

➡ Look for the suppression in heavy flavor jet fraction vs R_{jj}

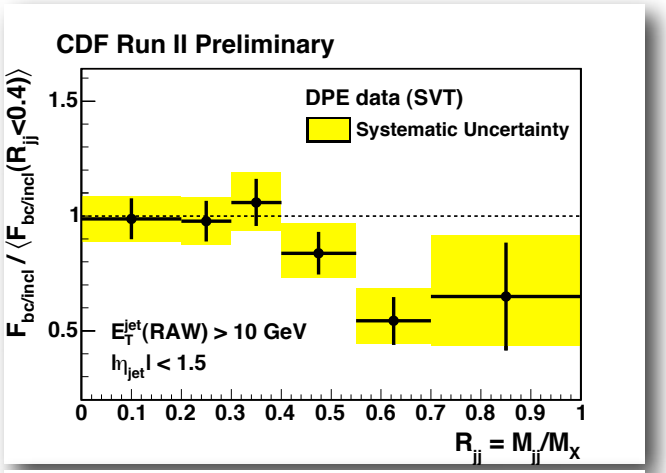

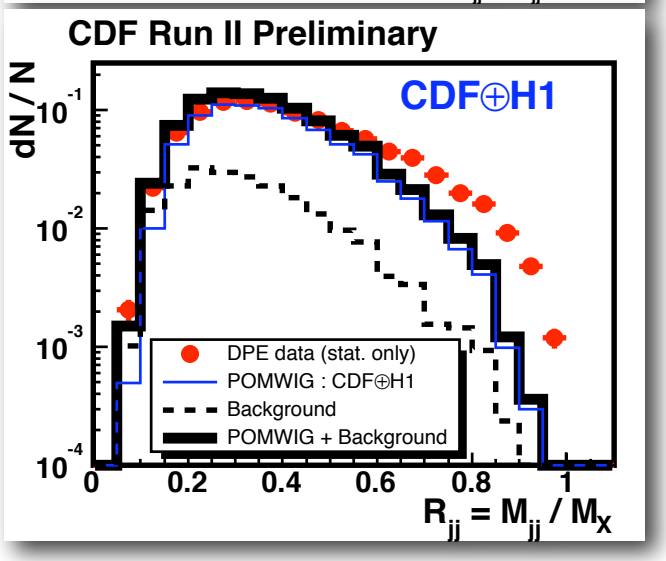

$$\frac{HF_{data}}{incl_{data}}$$

$$\frac{incl_{MC}}{incl_{data}}$$

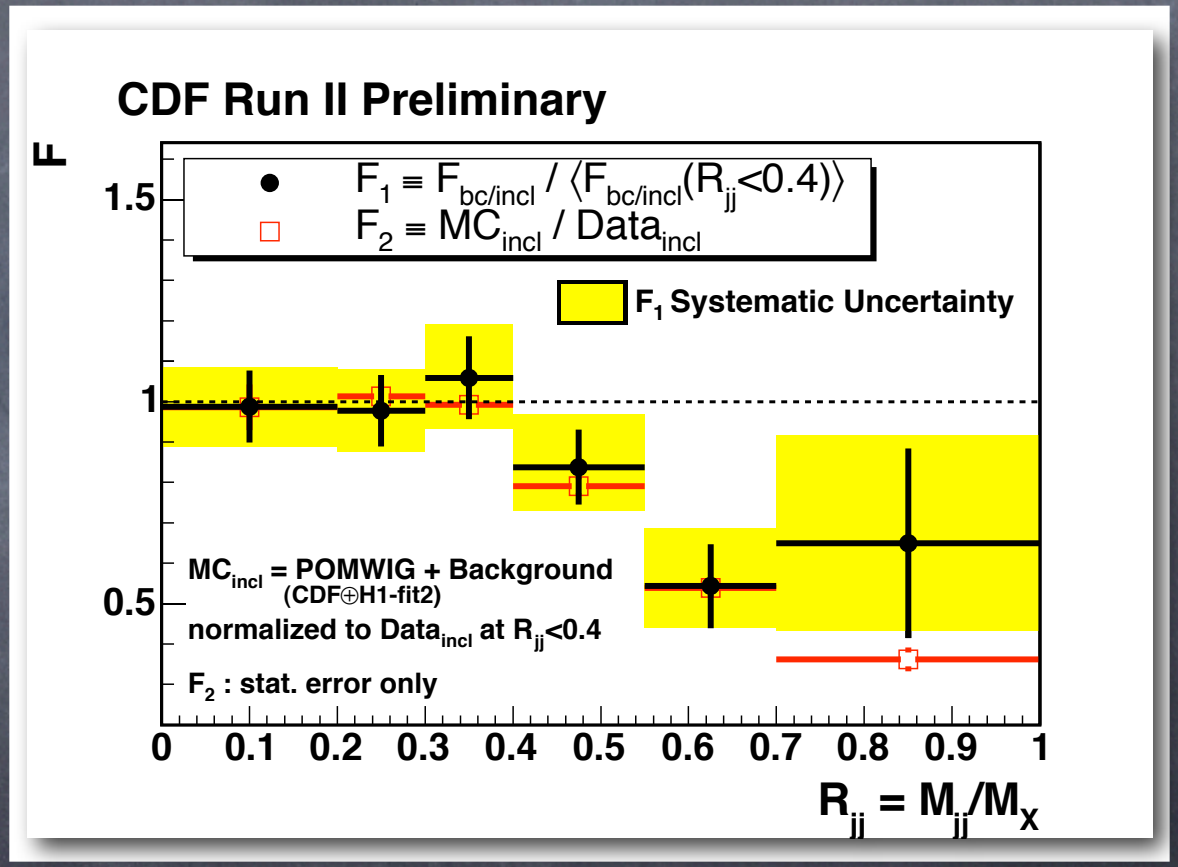

The two results are consistent with each other

Exclusive Di-jet Cross Section

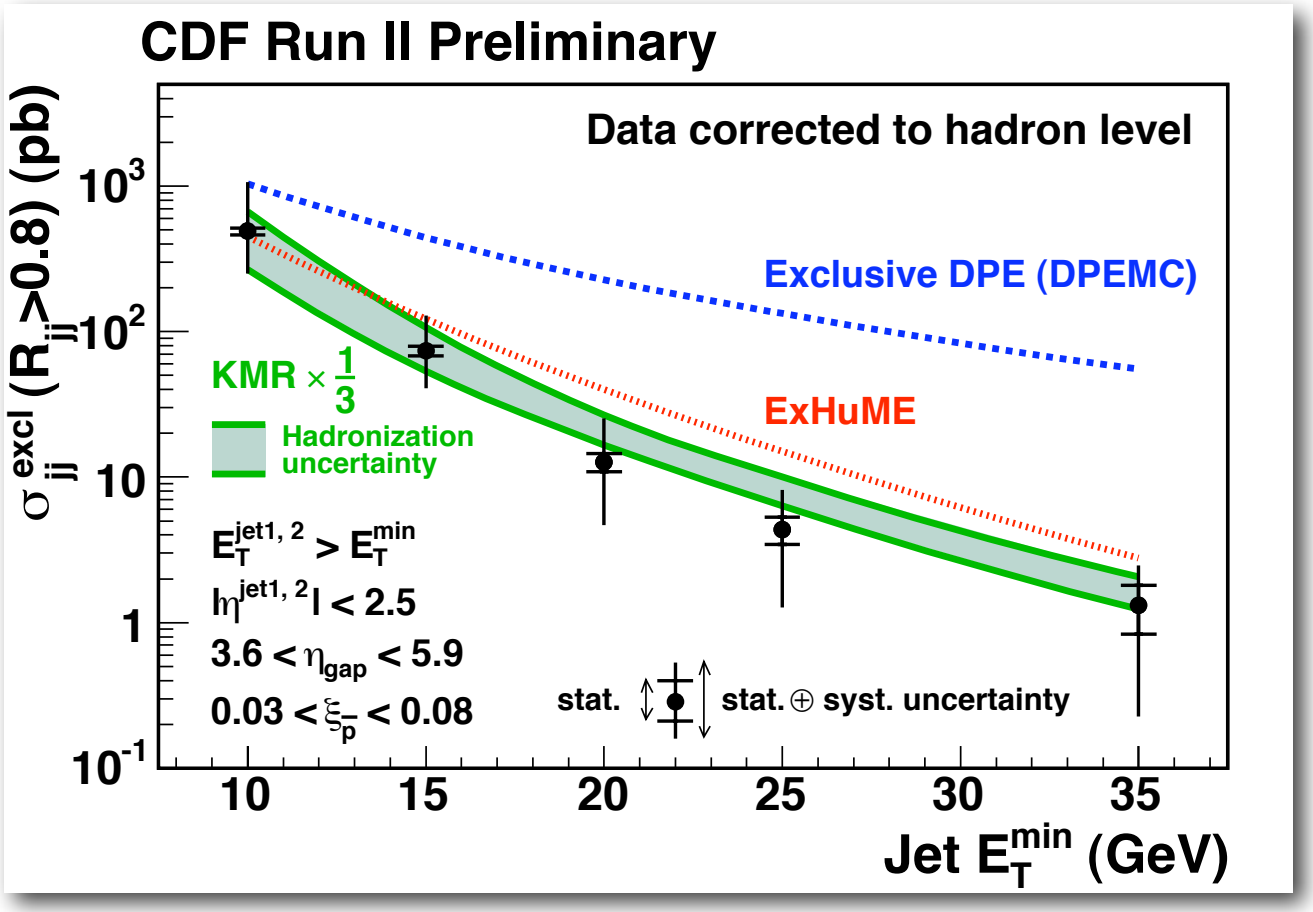

DPEMC Exclusive DPE

ExHuME

Khoze, Martin, Ryskin
at LO parton-level
(factor 3 uncertainty)
hep-ph/0507040

Measured σ_{jj}^{excl} prefers ExHuME and KMR calculations

Exclusive Di-jet Mass Reach

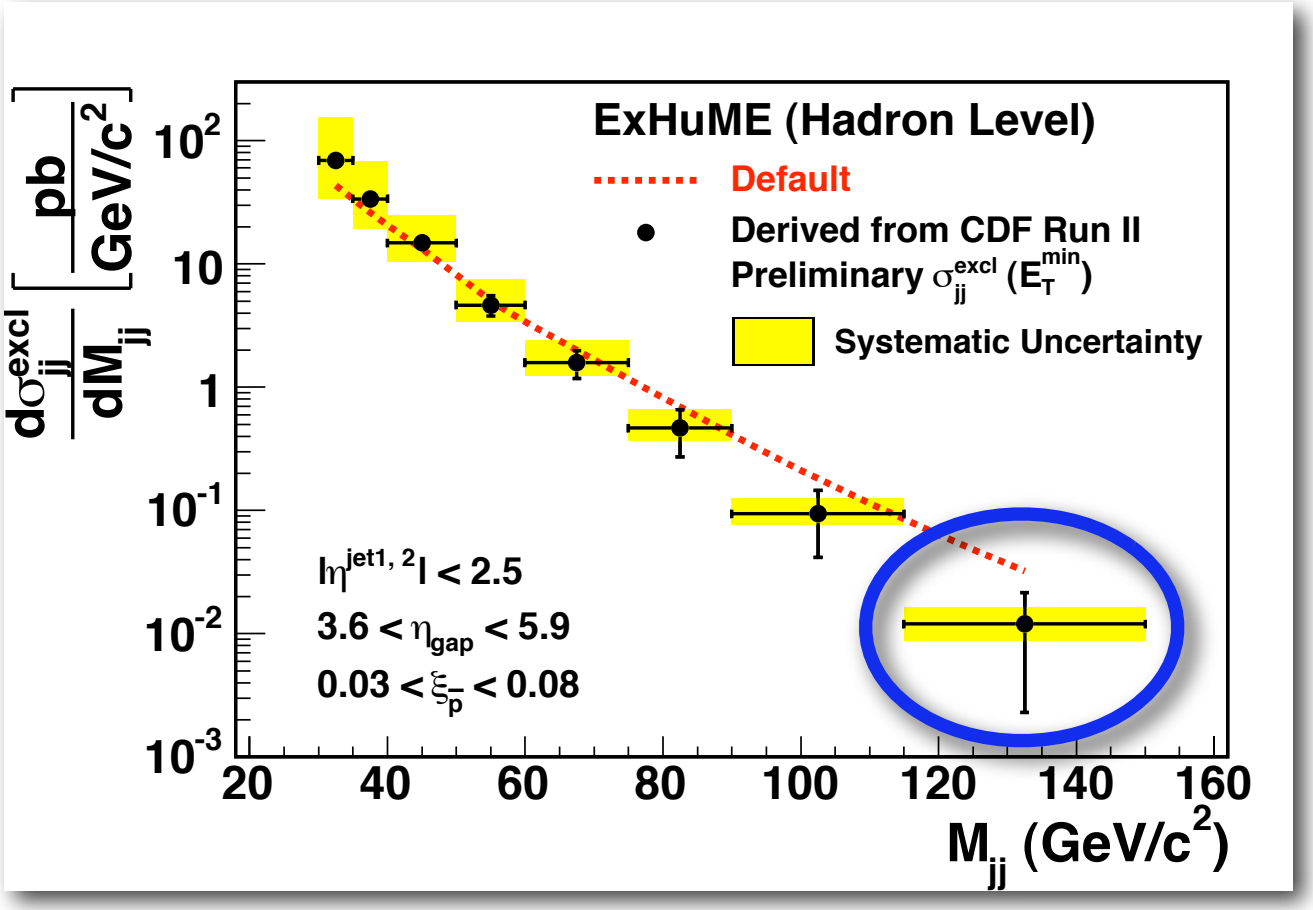

FP420@LHC

pp→pHp

σ(pHp)~3fb, S/B~1

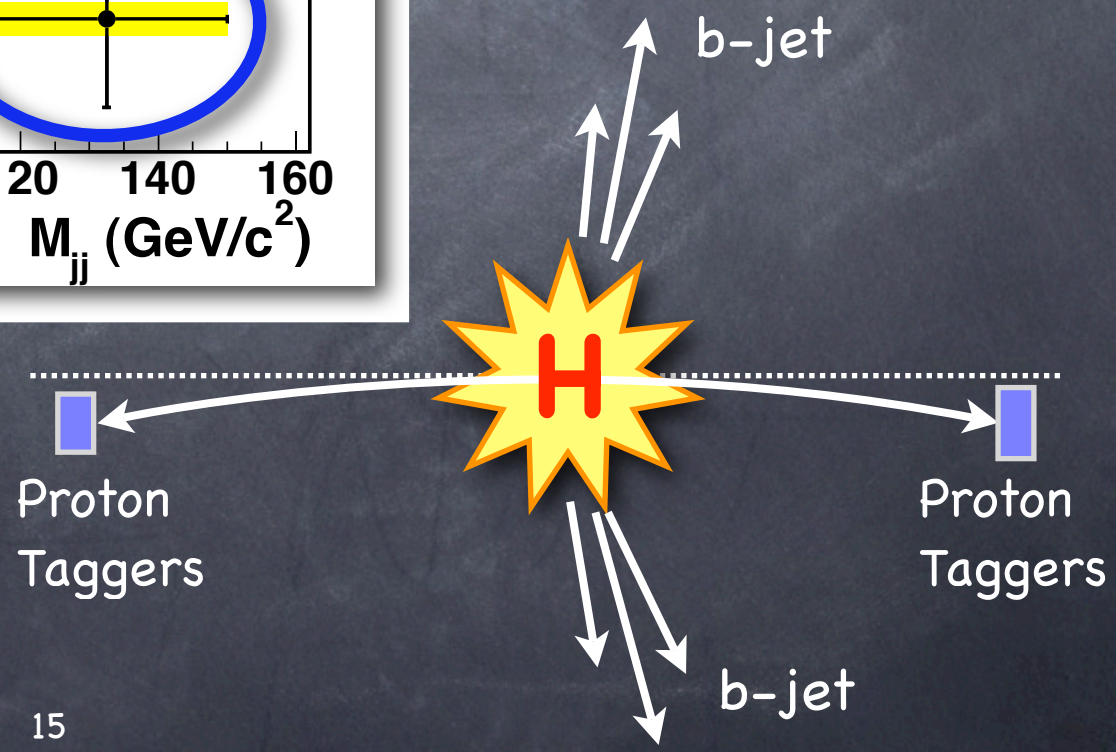

CDF $\bar{p}p \rightarrow \bar{p}jjp$ reaches Higgs mass range!!

Exclusive $\mu^+\mu^-$ Production

QED-mediated

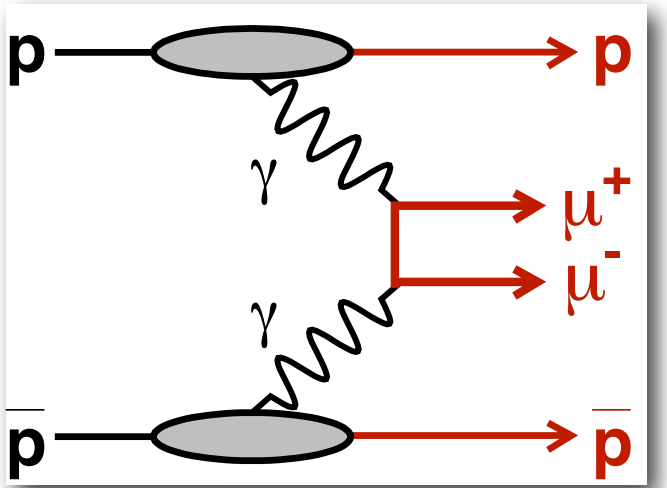

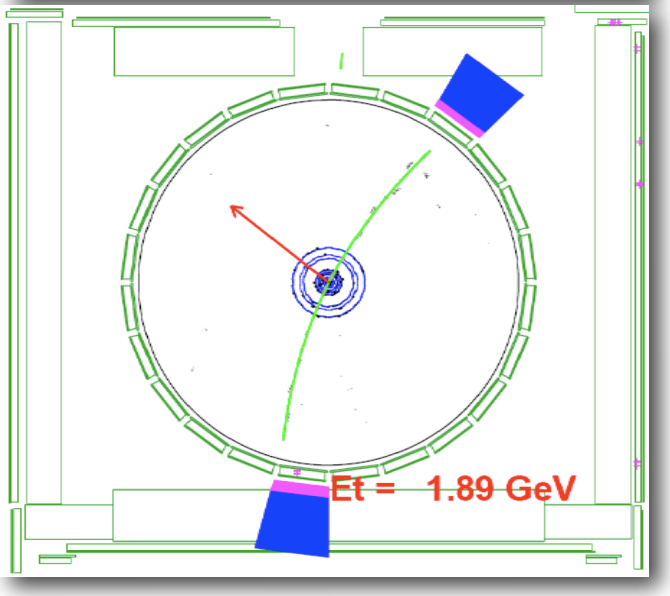

- Di-muon trigger : $p_T(\mu)>1.5$ GeV/c
- 2 muons + exclusive selections applied

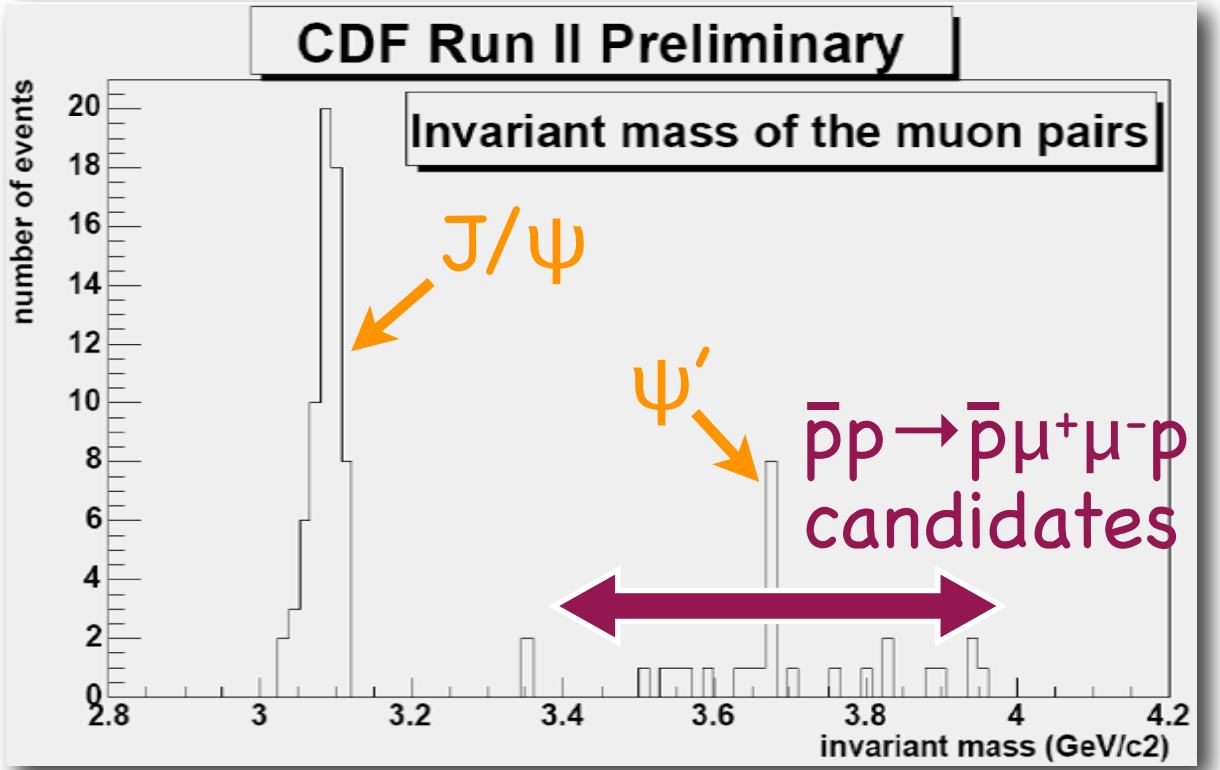

Diffractive photo-production

$\bar{p}p \rightarrow \bar{p} + \gamma I\!P\ (\rightarrow J/\psi \text{ or } \psi') + p$?

Summary

- Observed exclusive e^+e^- production in hadron-hadron collisions for the first time
  - ➡ Excellent agreement with QED prediction
- Candidate exclusive di-photon events found
  - ➡ Background estimation is in progress
- Observed exclusive di-jet production in $\bar{p}p$ collisions for the first time
  - ➡ Measured rate consistent with perturbative QCD calculations
- New results ($\bar{p}p \rightarrow \bar{p}\gamma\gamma p$, $\bar{p}\mu^+\mu^- p$) expected soon!!